8EB Datasheet

► For mounting into grooves

The 8EB strip is designed for surface recessed applications , the lip allows hiding plaster or wood edges.

- Small size
- Simple installation, custom lengths with special connectors available
- Good thermal performance
- Ultra smooth output, no dots
- Custom colours/finished available

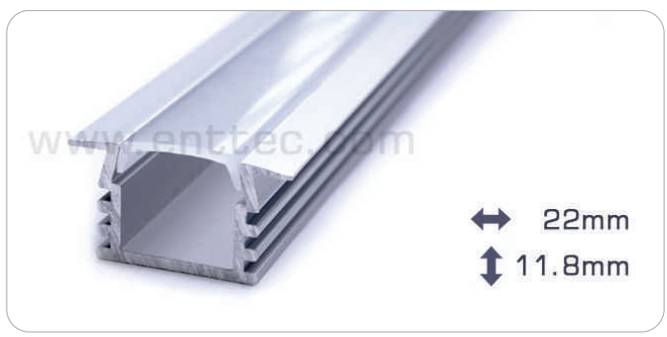

► Light options

PN	Brightness	Colour temp	lm/m	Input current/m
9CL1	Standard	6000K	562	0.27A
9CL2		4000K	562	0.27A
9CL3		3000K	562	0.27A
9CM1	Medium	6000K	840	0.4A
9CM2		4000K	840	0.4A
9CM3		3000K	840	0.4A
9CM4		2400K	840	0.4A
9CH1	High	6000K	1385	0.61A
9CH2		4000K	1385	0.61A
9CH3		3000K	1385	0.61A
9CU1	Ultra	6000K	1700	0.85A
9CU2		4000K	1700	0.85A
9CU3		3000K	1700	0.85A
9CY	Medium CTA	3000-5500K	488 570	0.49A
9VL4	High quality	RGB	R: 66 G: 179 B: 42.6	0.19A 0.14A 0.13A

► Profile

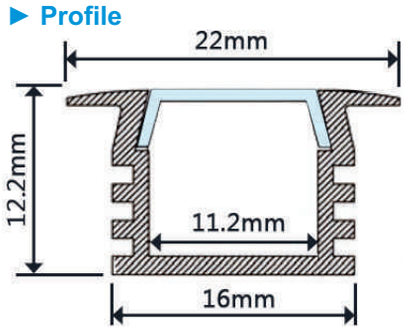

► Mounting clips

	Mounting brackets
	End cap
	End cap with hole

► Power supplies and drivers

24V Power Supplies

Aleph 1 CV rack - DMX512 controllable and RDM configurable

ENTTEC PTY LTD
Head office: 7 Macro Court
Rowville VIC 3178 Australia

www.enttec.com

Tel: +61 3 9763 5755
Fax: +61 3 9763 5688
sales@enttec.com